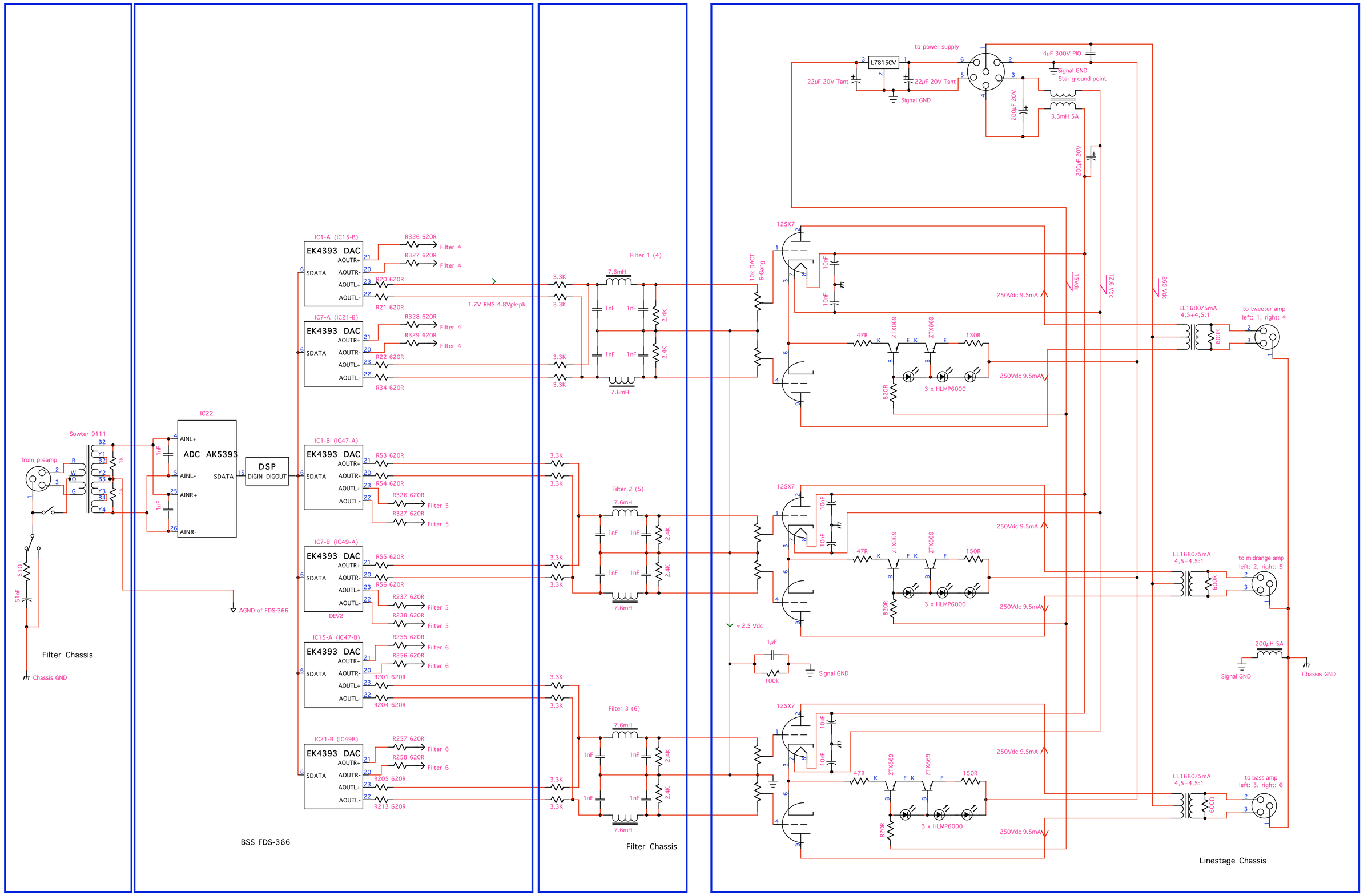

BETSY
six channel linestage
(three channels shown)
Rev 2g 2004-11-29
©Christian Rintelen